6 Handling systems

FESTO

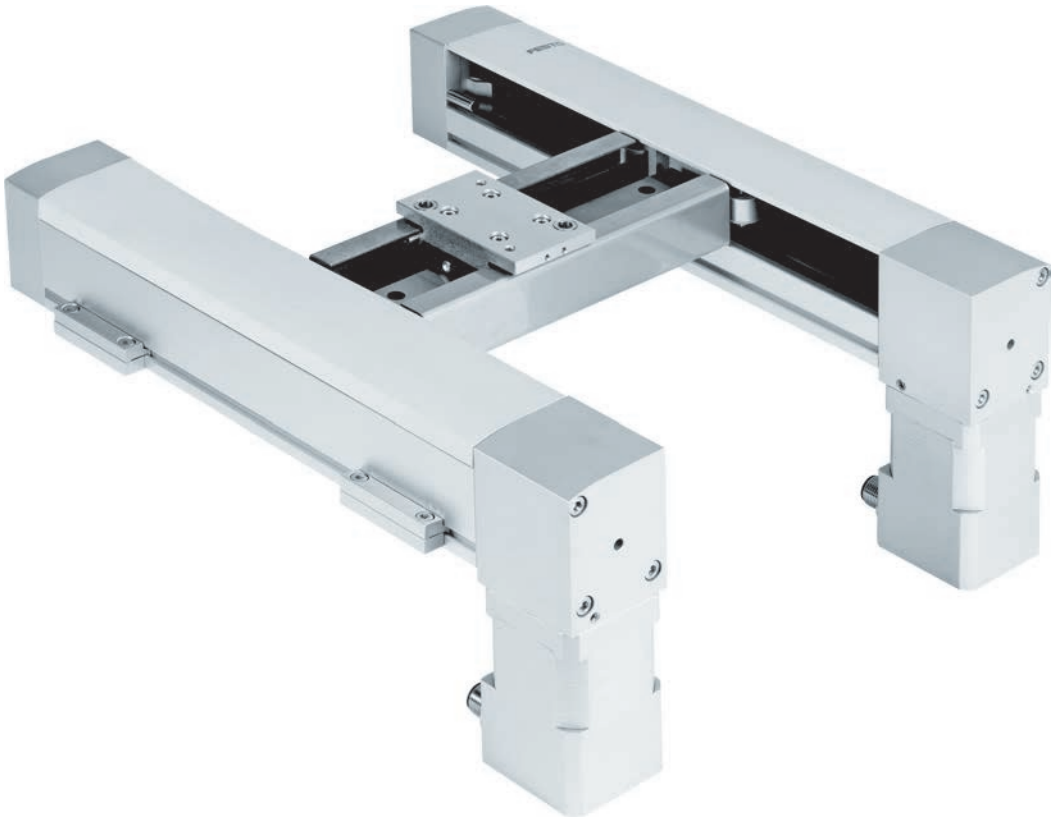

- Handling modules with electric or pneumatic drives
- Cartesian systems: variants consisting of linear drives and slide drives
- Parallel kinematic systems: high-speed handling system with robotic functionality for free movement in three dimensions
- Ready-to-install control systems

FESTO

Highlights

EXCM

Planar surface gantry

+ Maximum working space coverage
+ Low moving mass
+ High payload

Page 618

YXCR

Three-dimensional gantry

+ Can be used universally for handling light to heavy workpieces or high payloads
+ Especially suitable for very long strokes

Page 620

Table of contents

FESTO

Software tool

Configurator		Design a product with numerous features reliably and quickly with the help of the configurator. Select all the required product features step-by-step. The use of logic checks ensures that only correct configurations are available for selection.	The configurator is part of the electronic catalogue and is not available as a separate software program.

Handling modules

Type	 Handling module HSP	 Handling module, pneumatic HSW-AP, HSW-AS
Size	12, 16, 25	10, 12, 16
Theoretical force at 6 bar	40 ... 65 N	30 ... 55 N
Minimum cycle time	0.6 ... 1 s	0.6 ... 1 seconds
Y stroke	52 ... 170 mm	
Z stroke	20 ... 70 mm	80 ... 100 mm
Repetition accuracy	+/-0.01 mm, +/-0.02 mm	
Description	• Function module for the automatic transfer, feed and removal of small parts in extremely confined spaces • Guided vertical and horizontal motion sequence • High precision and good rigidity • Compact design • Extremely short cycle times • Cost-optimised • Stroke adjustment along Y- and Z-axes	• Function module for the automatic transfer, feed and removal of small parts in extremely confined spaces • Guided swivel and linear motion • High precision and good rigidity • HSW-AP: pneumatic, with swivel module DSM; HSW-AS: without drive, with drive shaft • Fast and compact • Low-cost and ideal for universal use
➔ Page/online	hsp	hsw

Cartesian systems

Type	 Single-axis system YXCS	 2D linear gantry YXCLL	 2D planar surface gantry EXCH	 2D planar surface gantry EXCM
Stroke	3000 mm	Y: max. 3000 mm, Z: 800 mm	X: max. 2000 mm, Y: 1500 mm	X: max. 700 mm, Y: 360 mm
Modules	Electric	Y: electric, Z: electric and pneumatic	X: electric, Y: electric	X: electric, Y: electric
Payload	Dependent on the selected dynamic response	Dependent on the selected dynamic response	0 ... max. 6 kg	0 ... max. 3 kg
Description	• Ready-to-install single-axis solution including energy chain for cable and tubing routing as well as matching motor and motor controller package • For any single-axis movement • Ideal for long gantry strokes and heavy loads • High mechanical rigidity and sturdy design • You can use the Handling Guide Online (HGO) to design a customised handling system for your application in just a few steps ➔ 621	• Ideal for long gantry strokes and heavy loads • High mechanical rigidity and sturdy design • Frequently used in feeding or loading applications • Use of tried and tested drives/axes from Festo • You can use the Handling Guide Online (HGO) to design a customised handling system for your application in just a few steps ➔ 621	• Optimal dynamic response when compared with other Cartesian gantry systems • Drive concept with low moving dead weight • Flat system design • High acceleration in both axial directions	• Excellent functionality in confined spaces • Small moving loads • Actuation via two stepper motors with integrated optical encoder and two-axis controller • With plain or recirculating ball bearing guide
➔ Page/online	623	623	exch	618

FESTO

Cartesian systems

Type	 2D planar surface gantry YXCF	 3D three-dimensional gantry YXCR
Stroke	X: max. 3000 mm, Y: 2000 mm	X: max. 3000 mm, Y: 2000 mm, Z: 800 mm
Modules	X: electric, Y: electric	X: electric, Y: electric, Z: electric or pneumatic
Payload	Dependent on the selected dynamic response	Dependent on the selected dynamic response
Description	• Can be used universally for handling light to heavy workpieces or high pay-loads • Especially suitable for very long strokes • High mechanical rigidity and sturdy design • Freely positionable; any intermediate positions • You can use the Handling Guide Online (HGO) to design a customised handling system for your application in just a few steps ➔ 621	• Can be used universally for handling light to heavy workpieces or high pay-loads • Especially suitable for very long strokes • High mechanical rigidity and sturdy design • Pneumatic and electric components can be freely combined • As an electrical solution – freely positionable / any intermediate positions • You can use the Handling Guide Online (HGO) to design a customised handling system for your application in just a few steps ➔ 621
➔ Page/online	**623**	**620**

Parallel kinematic systems

Type	 Tripod EXPT
Max. payload	5 kg
Working space nominal diameter	450 ... 1200 mm
Working space nominal height	100 mm
Max. picking rate	150 picks/min in 12" cycle
Description	• Low moving mass – ideal for high demands on dynamic response in three dimensions • Great path accuracy with a range of path profiles, even for very dynamic operation
➔ Page/online	expt

Control systems

Type	 Control system CMCA
Electrical connection	Spring-loaded terminal
Mains voltage AC	230/400 V
Nominal operating voltage phases	3-phase
Mains frequency	50 ... 60 Hz
Safety function	Safe Stop 1 (SS1)
Description	• Control solution for handling systems from Festo • Available on a mounting plate with or without control cabinet housing • Includes the multi-axis controller CMXR and the motor controller CMMP required for actuation
➔ Page/online	cmca

Note
Control cabinets for controllers in handling systems ➔ Page 1260

FESTO

Overview/Configuration/Ordering
→ www.festo.com/catalogue/excm

Additional information/Support/User documentation
→ www.festo.com/sp/excm

Cartesian systems

2D planar surface gantries

EXCM

- Movements in 2D in the horizontal working space
- Compact planar surface gantry
- Extremely compact design
- Maximum working space coverage
- Low moving mass
- High payload
- Two sizes for selection

Planar surface gantries EXCM

FESTO

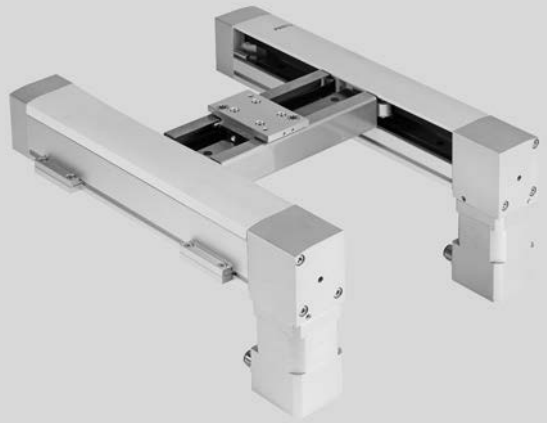

- Compact planar surface gantry
- Extremely compact design
- Maximum working space coverage
- Low moving mass
- High payload
- Two sizes for selection
- The slide is moved in a two-dimensional space by a rotating toothed belt.

➔ **www.festo.com/catalogue/ excm**

At a glance

Operating principle
The planar surface gantry EXCM can approach any position within its working space. The rotating toothed belt, driven by fixed motors, moves the slide within a two-dimensional area.

Drive and controller package
The functional drive and controller package are optimally adapted to each other. The encoder allows closed-loop position regulated operation.

EXCM-10
Ideal for the automating laboratory processes.

EXCM-30
For applications in the area of small parts assembly or automated laboratory applications.

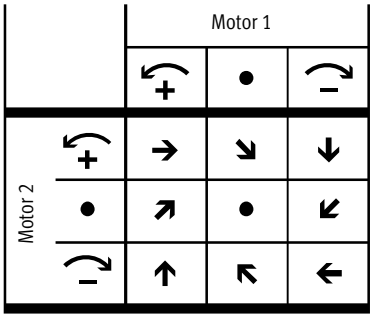

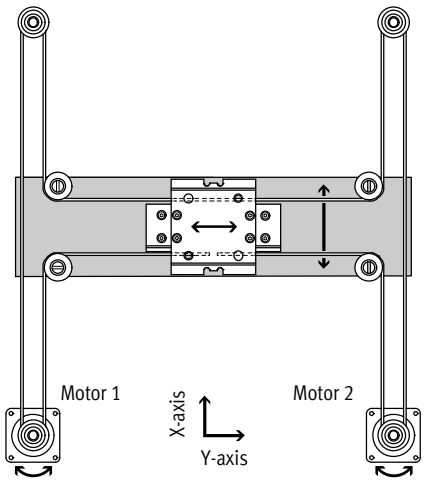

Data sheet

Size		10	30
Stroke of the			
X-axis	[mm]	150, 260, 300, 360, 460, 700	100, 150, 200, 300, 400, 500
		–	90 ... 700
Y-axis	[mm]	110	110, 160, 210, 260, 310, 360
Effective payload at max. dynamic response	[kg]	0.5	2/3[1)]
Max. speed	[m/s]	0.3	0.5
Max. acceleration	[m/s²]	3	10
Repetition accuracy	[mm]	±0.1	±0.05
Mounting position		horizontal	any

1) Vertical/Horizontal mounting position

FESTO

Overview/Configuration/Ordering
➔ **www.festo.com/catalogue/yxcs, .../yxcl, .../yxcf, .../yxcr**

Additional information/Support/User documentation
➔ **www.festo.com/sp/yxcs, .../yxcl, .../yxcf, .../yxcr**

Cartesian systems

Single-axis systems, 2D and 3D gantries

YXC...

Single-axis system YXCS
Versatile axis module for any type of single-axis movement

Linear gantry YXCL
Your specialist for long strokes along the Y-axis

Planar surface gantry YXCF
Universal and precise: your solution for horizontal, 2D movements

Three-dimensional gantry YXCR
Ideal for long strokes in the X direction

- Ready-to-install single-axis solutions including energy chain for routing cables and tubing as well as matching motor and motor controller package
- Movements in 2D in the vertical working space with linear gantries
- Movements in 2D in the horizontal working space with planar surface gantries
- Movements in a 3D working space with three-dimensional gantries

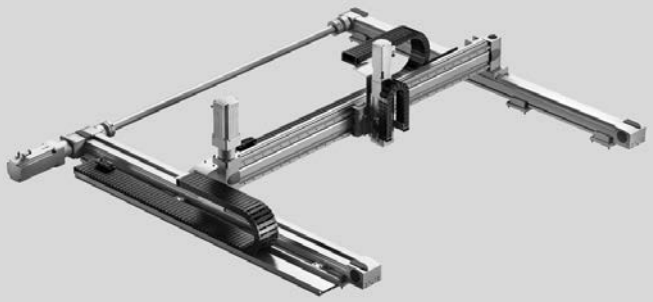

- Efficient
- Intuitive
- Fast
- Versatile
- Economical
- Reliable

➔ **www.festo.com/catalogue/ hgo**

At a glance

Handling systems from Festo: versatile, economical, perfectly fitting.

Are you looking for the right partner for your new handling system? Festo offers you a diverse range of handling systems for a multitude of applications, from standard solutions for common applications through to customised solutions for your own very specific requirements. In addition, our ready-to-install systems and support services mean less work for you. We support you from the design stage through to installation and commissioning. That allows you to concentrate entirely on your core business and increase your productivity.

Handling Guide Online

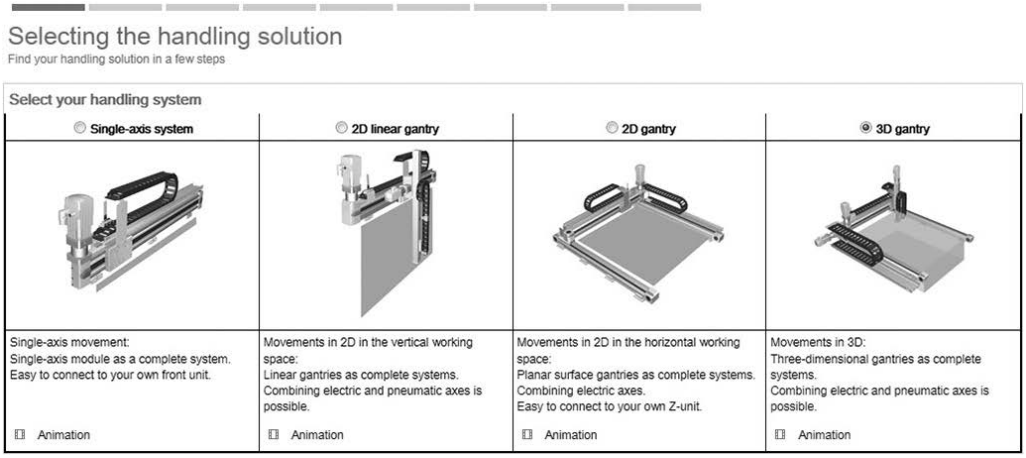

The Handling Guide Online is a configuration and ordering platform in one. You will find it - as all products - on Festo's website under the tab "Products". It reduces your engineering time and effort to a minimum and guides you to the right handling system in record time.
All you have to do is enter the data for your application. The Handling Guide Online automatically works out suitable solutions, including CAD model, data sheet and net price. You then simply select the system you want, which you can order immediately through the Online Shop. There's no faster or simpler way to get the right handling system. Try out the new tool today!

Advantages at a glance

Economical
- Minimal engineering work
- Reduced time and effort for logistics, installation and commissioning

From a single source
- Hardware, software, service
- With the right drive package

Ready-to-install
- Completely assembled, all tubing and wiring fitted and fully tested
- Including user documentation

Reliable
- Tried and tested standard axes
- Perfectly coordinated components

Handling Guide Online HGO

New

FESTO

Three steps to your handling system

1st step:
Choose the type of handling system and enter your application data into the Handling Guide Online. The tool calculates appropriate handling systems, including price.

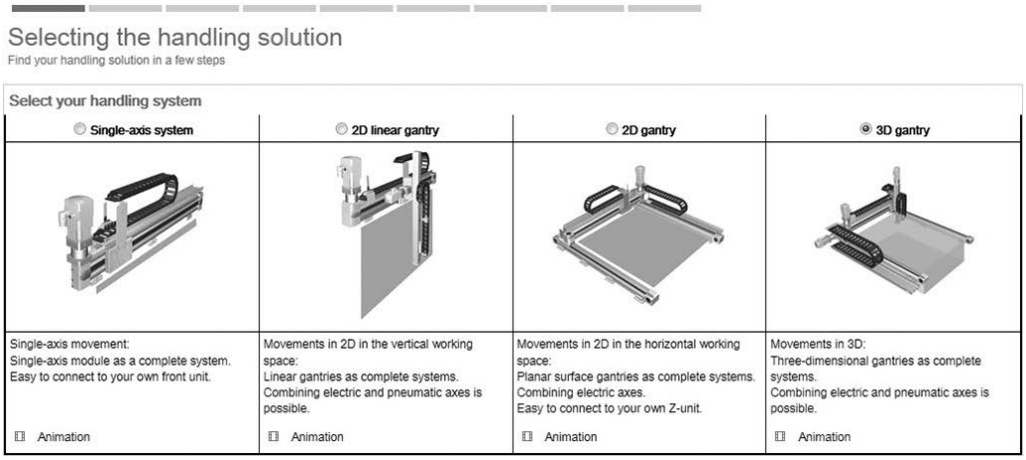

6

2nd step:
Select the suitable handling system from the list of suggestions. The correctly configured CAD model and the data sheet with all the relevant figures are immediately available for download.

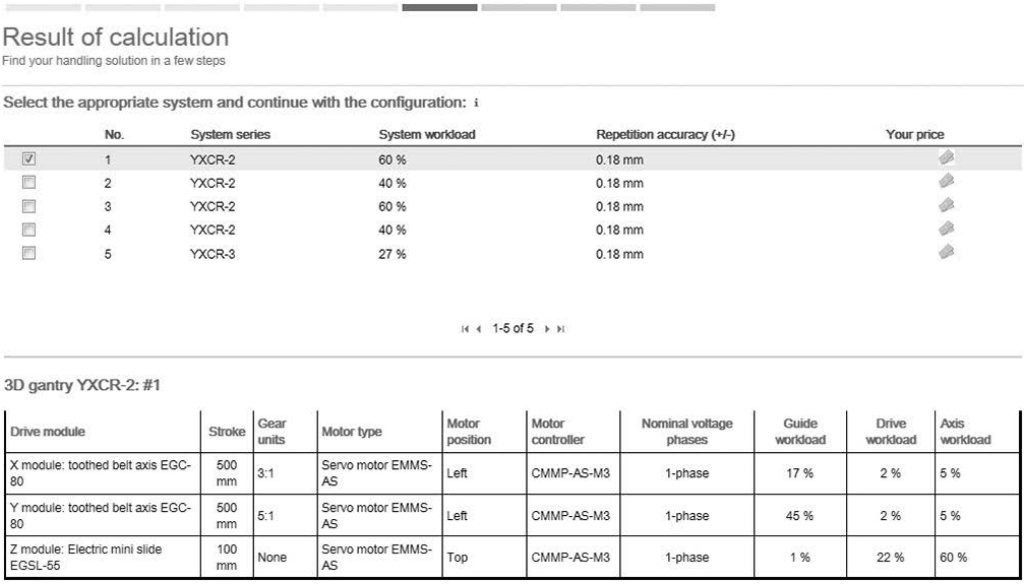

	No.	System series	System workload	Repetition accuracy (+/-)	Your price
☑	1	YXCR-2	60 %	0.18 mm	
☐	2	YXCR-2	40 %	0.18 mm	
☐	3	YXCR-2	60 %	0.18 mm	
☐	4	YXCR-2	40 %	0.18 mm	
☐	5	YXCR-3	27 %	0.18 mm	

Drive module	Stroke	Gear units	Motor type	Motor position	Motor controller	Nominal voltage phases	Guide workload	Drive workload	Axis workload
X module: toothed belt axis EGC-80	500 mm	3:1	Servo motor EMMS-AS	Left	CMMP-AS-M3	1-phase	17 %	2 %	5 %
Y module: toothed belt axis EGC-80	500 mm	5:1	Servo motor EMMS-AS	Left	CMMP-AS-M3	1-phase	45 %	2 %	5 %
Z module: Electric mini slide EGSL-55	100 mm	None	Servo motor EMMS-AS	Top	CMMP-AS-M3	1-phase	1 %	22 %	60 %

3rd step:
You can use additional options to configure your selected system in accordance with your requirements. Then add the preferred handling system to your shopping basket and confirm your order. Festo will deliver a ready-to-install system, including all user documentation in accordance with the EC Machinery Directive, as quickly as possible.

Characteristic	Value
Handling type	3D gantry
Payload	10 kg
Distance from the centre of mass in the X direction	0 mm
Distance from the centre of mass in the Y direction	0 mm
Distance from the centre of mass in the Z direction	0 mm
Drive system of the X-axis	Electric: several positions
Drive system of the Y-axis	Electric: several positions
Drive system of the Z-axis	Electric: several positions
Working stroke in X direction	500 mm
Working stroke in Y direction	500 mm
Working stroke in Z direction	100 mm
Motor position on the X-axis	Left
Motor position on the Y-axis	Left
Fieldbus interface	EtherNet/IP
AC 1-phase	230 V
AC 3-phase	400 V
Travel, vertical 1 in Z direction	20 mm
Travel, horizontal in X direction	100 mm
Travel. horizontal in Y direction	100 mm

Standard handling systems

Ready-to-install standard handling systems from Festo provide you with fast and reliable solutions for all standard applications: fully assembled and tested, including energy chain, connection technology and matching drive package. The individual components are perfectly harmonised and guarantee reliable operation.

Single-axis system YXCS

- For one-dimensional movements
- High mechanical rigidity
- For the following strokes:
  Y-direction: up to 3000 mm
- Outstanding operational and process reliability ensured by routing of tubing and cables through energy chains in Y-direction.
- Standardised interface for easy connection of a front unit

Linear gantry YXCL

- For vertical movements in 2D
- High mechanical rigidity
- For the following strokes:
  Y-direction: up to 3000 mm
  Z-direction: up to 800 mm
- Outstanding operational and process reliability ensured by routing of tubing and cables through energy chains in Y- and Z-direction.

Planar surface gantry YXCF

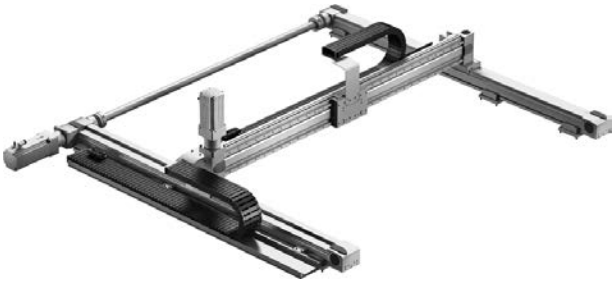

- For horizontal movements in 2D
- High mechanical rigidity
- For the following strokes:
  X-direction: up to 3000 mm
  Y-direction: up to 2000 mm
- Outstanding operational and process reliability ensured by routing the tubing and cables through energy chains in X- and Y-direction
- Standardised interface for easy connection of a front unit

Three-dimensional gantry YXCR

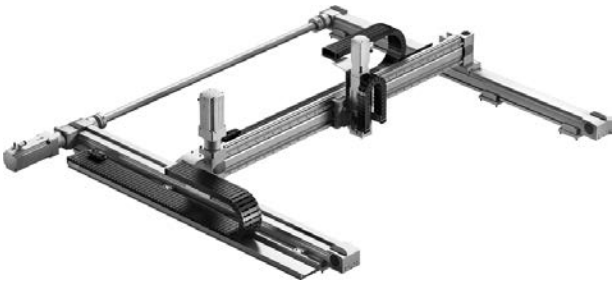

- For three-dimensional movements in a space
- High mechanical rigidity
- For the following strokes:
  X-direction: up to 3000 mm
  Y-direction: up to 2000 mm
  Z-direction: up to 800 mm
- In Z-direction, you can choose between pneumatic and electrical components
- Outstanding operational and process reliability ensured by routing the tubing and cables through energy chains in X-,Y- and Z-direction.

FESTO

Data sheet – Single-axis system

Range of applications
- For any single-axis movement
- Ideal for long gantry strokes and heavy loads

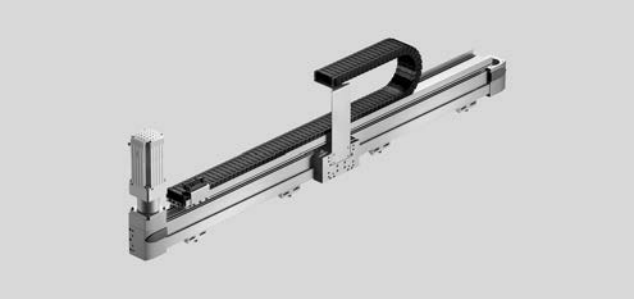

Technical data

Size	Y-direction	Max. working stroke [mm]	Max. payload [N]	Mounting position
YXCS	EGC-50-TB-KF	1900	Dependent on the selected dynamic response	Horizontal
	EGC-80-TB-KF	3000		
	EGC-120-TB-KF	3000		
	EGC-185-TB-KF	3000		
	EGC-HD-125-TB-KF	3000		
	EGC-HD-160-TB-KF	3000		
	EGC-HD-220-TB-KF	3000		
Specialised requirements	Customised on request			

Data sheet – Linear gantries

Range of applications
- Ideal for long gantry strokes and heavy loads
- Frequently used in feeding or loading applications

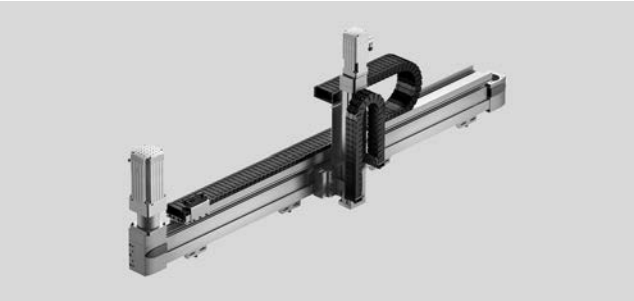

Technical data

Size	Y-direction	Z-direction	Max. working stroke [mm]	Max. payload [N]	Mounting position
YXCL-1	• EGC-50-TB-KF	• EGSL-35 • DGSL-6	Y: 1900 Z: 50	Dependent on the selected dynamic response	Horizontal
YXCL-2	• EGC-80-TB-KF • EGC-HD-125-TB-KF	• EGSL-45/55 • DGEA-18 • EGC-70-BS-KF • DGSL-12/16	Y: 3000 Z: 800		
YXCL-3	• EGC-120-TB-KF • EGC-HD-160-TB-KF	• EGSL-75 • DGEA-25/40 • EGC-80-BS-KF • DGSL-20/25	Y: 3000 Z: 800		
YXCL-4	• EGC-120-TB-KF • EGC-HD-160-TB-KF	• EGSL-75 • DGEA-25/40 • EGC-80-BS-KF • DGSL-20/25	Y: 3000 Z: 800		
Specialised requirements	Customised on request				

Data sheet – Planar surface gantries

Range of applications
- For any movement in 2D space
- For very high requirements in terms of precision combined with long strokes
- Can be used universally for handling light to very heavy workpieces or high payloads

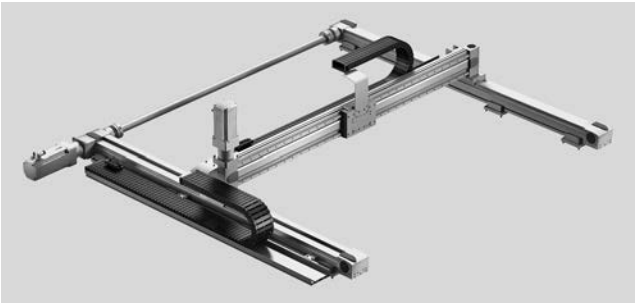

Technical data

Size	Y-direction	Z-direction	Max. working stroke [mm]	Max. payload [N]	Mounting position
YXCF-1	• EGC-50-TB-KF	• EGC-50-TB-KF	Y: 1900 Z: 1900	Dependent on the selected dynamic response	Horizontal
YXCF-2	• EGC-80-TB-KF	• EGC-80-TB-KF • EGC-HD-125-TB-KF	Y: 3000 Z: 2000		
YXCF-3	• EGC-120-TB-KF	• EGC-120-TB-KF • EGC-HD-160-TB	Y: 3000 Z: 2000		
YXCF-4	• EGC-185-TB-KF	• EGC-185-TB-KF • EGC-HD-220-TB-KF	Y: 3000 Z: 2000		
Specialised requirements	Customised on request				

Data sheet – Three-dimensional gantry

Range of applications
- For any movement in 3D space
- For very high requirements in terms of precision combined with long strokes
- Can be used universally for handling light to very heavy workpieces or high payloads

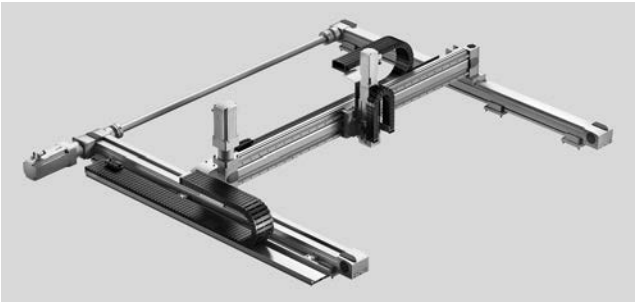

Technical data

Size	X-direction	Y-direction	Z-direction	Max. working stroke [mm]	Max. payload [N]	Mounting position
YXCR-1	• EGC-50-TB-KF	• EGC-50-TB-KF	• EGSL-35 • DGSL-6	X: 1900 Y: 1900 Z: 50	Dependent on the selected dynamic response	Horizontal
YXCR-2	• EGC-80-TB-KF	• EGC-80-TB-KF • EGC-HD-125-TB	• EGSL-45/55 • DGEA-18 • EGC-70-BS-KF • DGSL-12/16	X: 3000 Y: 2000 Z: 800		
YXCR-3	• EGC-120-TB-KF	• EGC-120-TB-KF • EGC-HD-160-TB	• EGSL-75 • DGEA-25/40 • EGC-80-BS-KF • DGSL-20/25	X: 3000 Y: 2000 Z: 800		
YXCR-4	• EGC-185-TB-KF	• EGC-185-TB-KF • EGC-HD-220-TB-KF	• DGEA-40 • EGC-120-BS-KF	X: 3000 Y: 2000 Z: 800		
Specialised requirements	Customised on request					

FESTO

6